AN7222N

AM Tuner, FM-AM IF Amplifier

■ Description

The AN7222N is a monolithic integrated circuit designed for high performance, multi-function FM-AM IF system of low voltage operation.

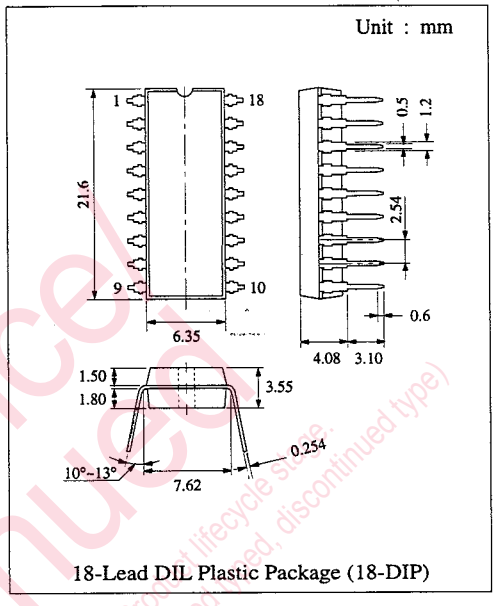

18-Lead DIL Plastic Package (18-DIP)

■ Features

- Wide operation voltage (V_{CC} = 2.8 ~ 9.6V)
- Built-in detectors for both FM and AM
- Built-in level meter output (for both FM and AM)
- High sensitivity for AM owing to RF amplifier
- Low power consumption
- AFC control terminal
- Fewer external components

Maintenance/Discontinued
Maintenance/Discontinued includes following four Product lifecycle stage.
(panel,maintenance type, maintenance type, planed discontinued, discontinued type)

■ Block Diagram

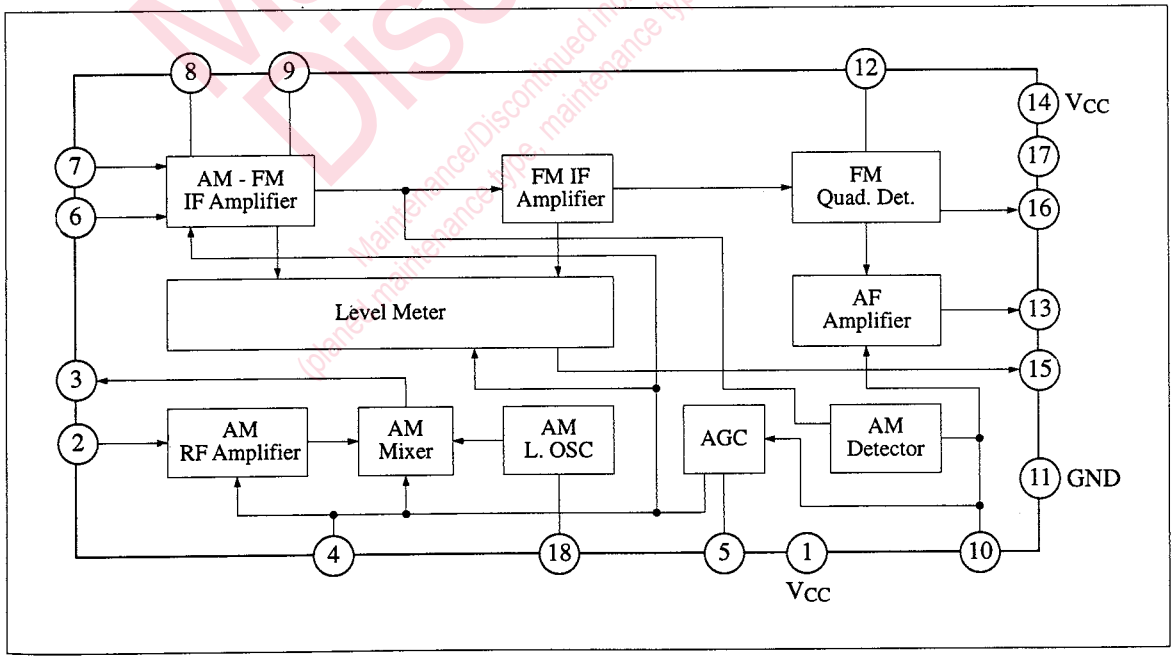

■ Absolute Maximum Ratings (Ta=25°C)

Item	Symbol	Rating	Unit
Supply Voltage	V_{CC}	9.6	V
Supply Current	I_{CC}	20	mA
Power Dissipation	P_D	192	mW
Operating Ambient Temperature	Topr	-20 ~ +75	°C
Storage Temperature	Tstg	-55 ~ +150	°C

Operating Supply Voltage Range: V_{CC} = 2.8V ~ 9.6V

■ Electrical Characteristics (V_{CC}=5V, Ta=25°C)

	Item	Symbol	Condition	min.	typ.	max.	Unit
FM	Detector Output Voltage	$V_{O(FM)}$	Input = 100dB	45	60	72	mV
	Limiting Sensitivity	$V_{in(lim)}$	Measure V_{in} at V_O -3dB	41	44	47	dBμ
	Meter Output Voltage (1)	V_{15-11}	Input = 60dB	150	450	750	mV
	Meter Output Voltage (2)	V_{15-11}	Input = 100dB	970	1100	1250	mV
	Offset Voltage	V_{16-17}	Input = 0dB	-250	0	250	mV
AM	Detector Output Voltage	$V_{O(AM)}$	Input = 60dB	45	58	70	mV
	Sensitivity	$S_{(AM)}$	Measure V_{in} at V_O = 10mV	8.5	14	19.5	dBμ

Note : FM: f = 10.7MHz, f_{dev} = 22.5kHz, f_m = 400Hz
AM: f = 1MHz, f_m = 400Hz, Mod. = 30%

Maintenance/Discontinued
Maintenance/Discontinued includes following our Product Lifecycle stage, planed maintenance type, maintenance type, planed discontinued type, discontinued type.

■ Pin

Pin No.	Pin Name	Pin No.	Pin Name
1	V_{CC} (AM)	10	AM Detector Output
2	AM RF Amplifier Input	11	GND
3	AM Mixer Output	12	FM Detector Coil
4	AGC Output (2)	13	AF Output
5	AGC Output (1)	14	V_{CC}
6	AM IF Amplifier Input	15	Level Meter Output
7	FM IF Amplifier Input	16	AFC Output
8	IF By-pass	17	Reference Voltage
9	IF By-pass	18	Local Oscillator Coil

Test Circuit

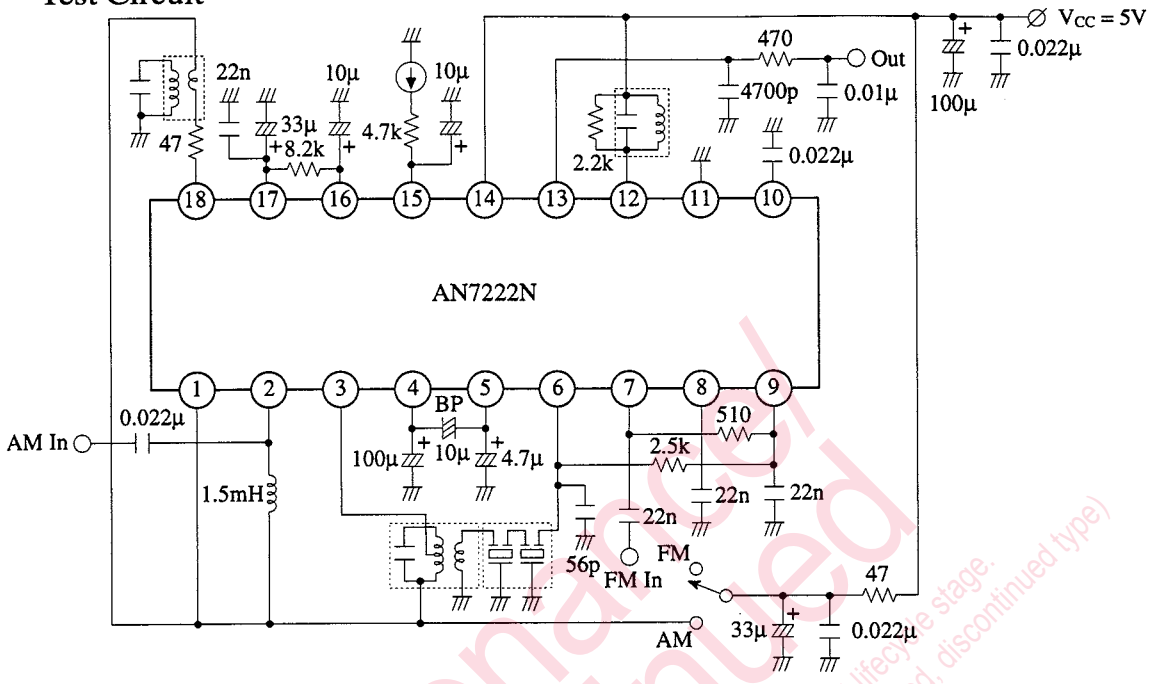

■ Application Circuit

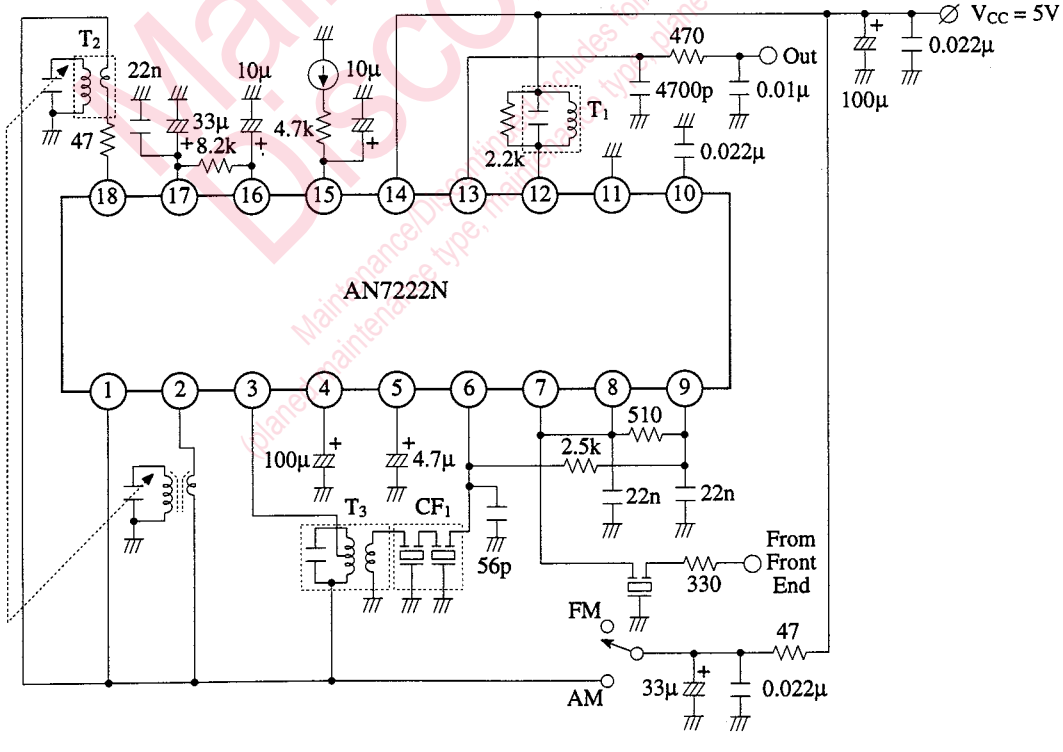

Maintenance/Discontinued
Maintenance/Discontinued includes following four Product lifecycle stage.
(planed maintenance type, maintenance type, planed discontinued typed, discontinued type)

■ Coil Specifications

Symbol	Use, Freq.	Type No.	Maker	Connection Diagram	Number of Turns	Tuning Cap.	Unloaded Q
T_1	FM Quad Coil 10.7MHz	EIF-7S752A	Matsushita	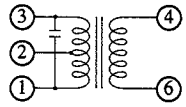	①···② 8T ②···③ 5T ④···⑥ 3T	100pF	90±20%
T_2	AM MW Osc. Coil	ELL-7S754	Matsushita	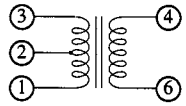	①···② 4T ②···③ 125T ④···⑥ 7T	–	95±20%
T_3	AM Mixer Output 455kHz	EIA-7S802A	Matsushita	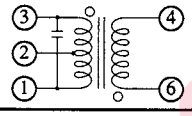	③···② 35T ⑥···④ 10T ②···① 19T	1500pF	60±30%

■ Ceramic Filter Specification

Symbol	Use	Type No.	Maker	Center Freq.	Band Width	Loss
CF_1	AM IF	CFM2-455B	Toko	455Hz	7kHz (-6dB)	2.6dB

■ Characteristics Curve

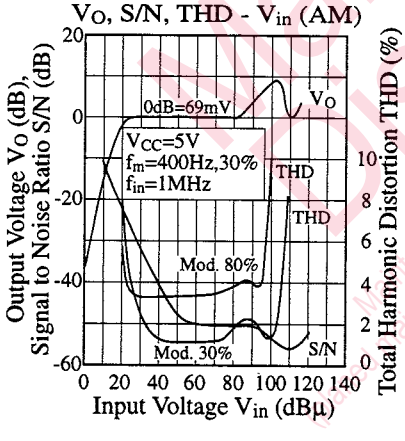

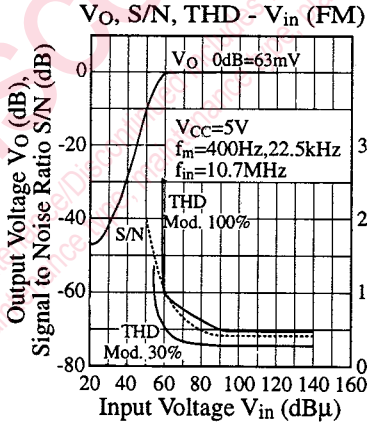

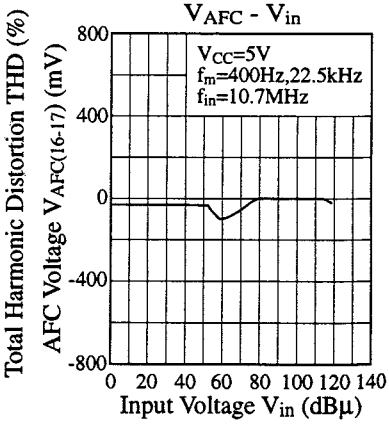

Maintenance/Discontinued
Maintenance/Discontinued (Product life cycle stage following four Product life cycle stages: Mass production, Maintenance, Discontinued (planned discontinued type), Discontinued (discontinued type))
Maintenance/Discontinued (Product life cycle stage: Mass production, Maintenance, Discontinued (planned discontinued type), Discontinued (discontinued type))

■ Characteristics Curve (Continue)

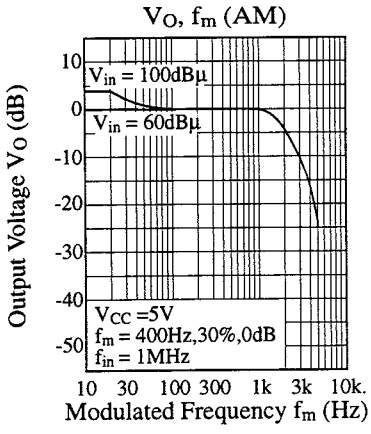

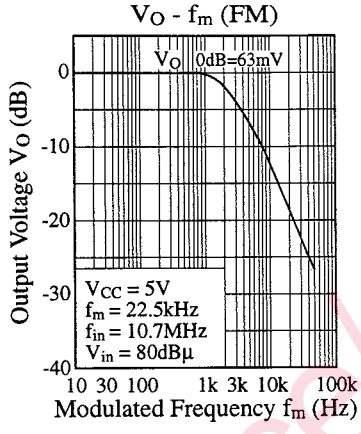

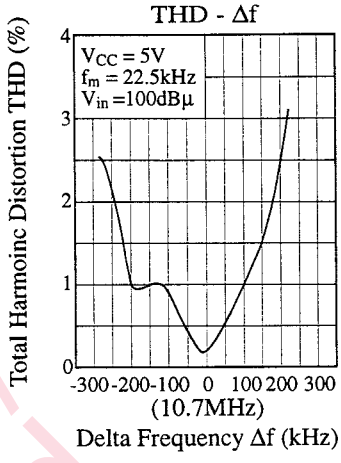

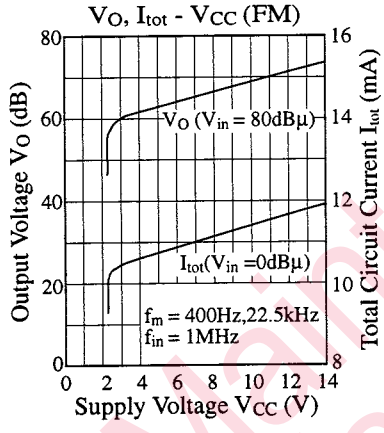

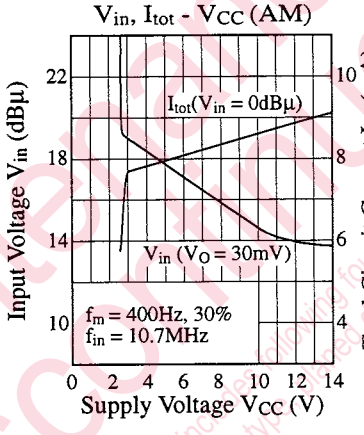

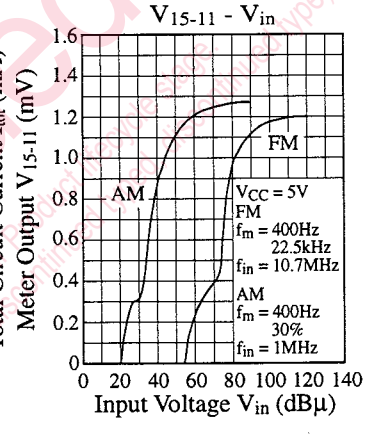

■ Printed Circuit Board Layout (Scale: 1:1)

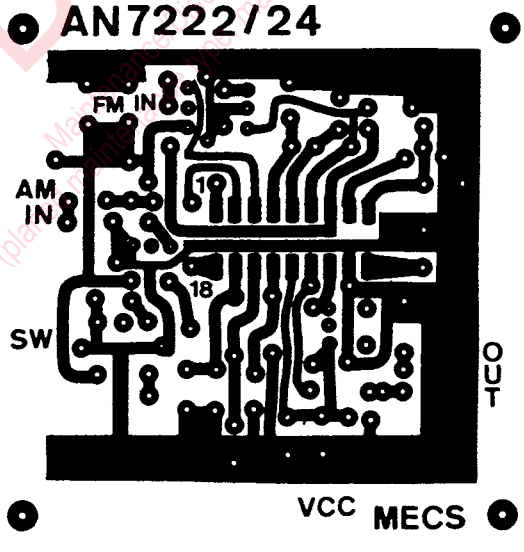

Maintenance/ Discontinued

Request for your special attention and precautions in using the technical information and semiconductors described in this book

(1) If any of the products or technical information described in this book is to be exported or provided to non-residents, the laws and regulations of the exporting country, especially, those with regard to security export control, must be observed.

(2) The technical information described in this book is intended only to show the main characteristics and application circuit examples of the products. No license is granted in and to any intellectual property right or other right owned by Panasonic Corporation or any other company. Therefore, no responsibility is assumed by our company as to the infringement upon any such right owned by any other company which may arise as a result of the use of technical information described in this book.

(3) The products described in this book are intended to be used for standard applications or general electronic equipment (such as office equipment, communications equipment, measuring instruments and household appliances).
Consult our sales staff in advance for information on the following applications:
- Special applications (such as for airplanes, aerospace, automobiles, traffic control equipment, combustion equipment, life support systems and safety devices) in which exceptional quality and reliability are required, or if the failure or malfunction of the products may directly jeopardize life or harm the human body.
- Any applications other than the standard applications intended.

(4) The products and product specifications described in this book are subject to change without notice for modification and/or improvement. At the final stage of your design, purchasing, or use of the products, therefore, ask for the most up-to-date Product Standards in advance to make sure that the latest specifications satisfy your requirements.

(5) When designing your equipment, comply with the range of absolute maximum rating and the guaranteed operating conditions (operating power supply voltage and operating environment etc.). Especially, please be careful not to exceed the range of absolute maximum rating on the transient state, such as power-on, power-off and mode-switching. Otherwise, we will not be liable for any defect which may arise later in your equipment.
Even when the products are used within the guaranteed values, take into the consideration of incidence of break down and failure mode, possible to occur to semiconductor products. Measures on the systems such as redundant design, arresting the spread of fire or preventing glitch are recommended in order to prevent physical injury, fire, social damages, for example, by using the products.

(6) Comply with the instructions for use in order to prevent breakdown and characteristics change due to external factors (ESD, EOS, thermal stress and mechanical stress) at the time of handling, mounting or at customer's process. When using products for which damp-proof packing is required, satisfy the conditions, such as shelf life and the elapsed time since first opening the packages.

(7) This book may be not reprinted or reproduced whether wholly or partially, without the prior written permission of our company.

20080805

Maintenance/ Discontinued
Maintenance/Discontinued includes following four Product lifecycle stage.
(planed maintenance type, maintenance type, planed discontinued type, discontinued type)